Rev	revision text	rev date	rev by	apr. date	apr. by
01	general simplification	2023-12-14	Kalland	2023-12-15	Michaels

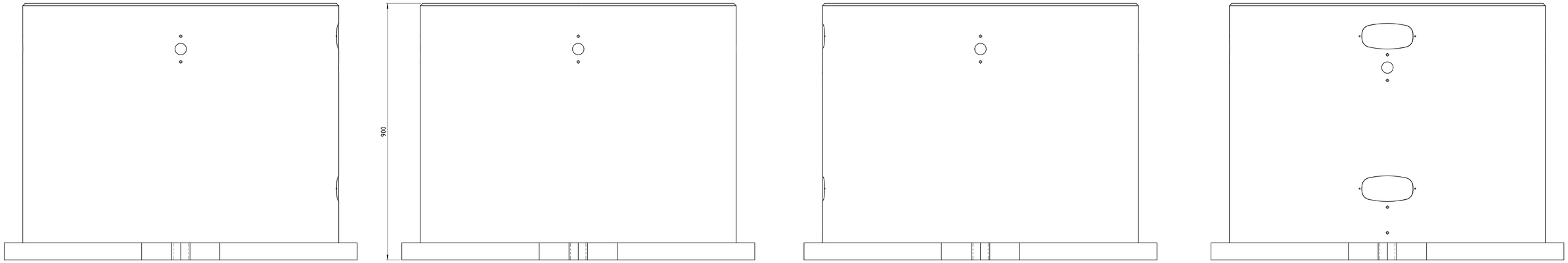

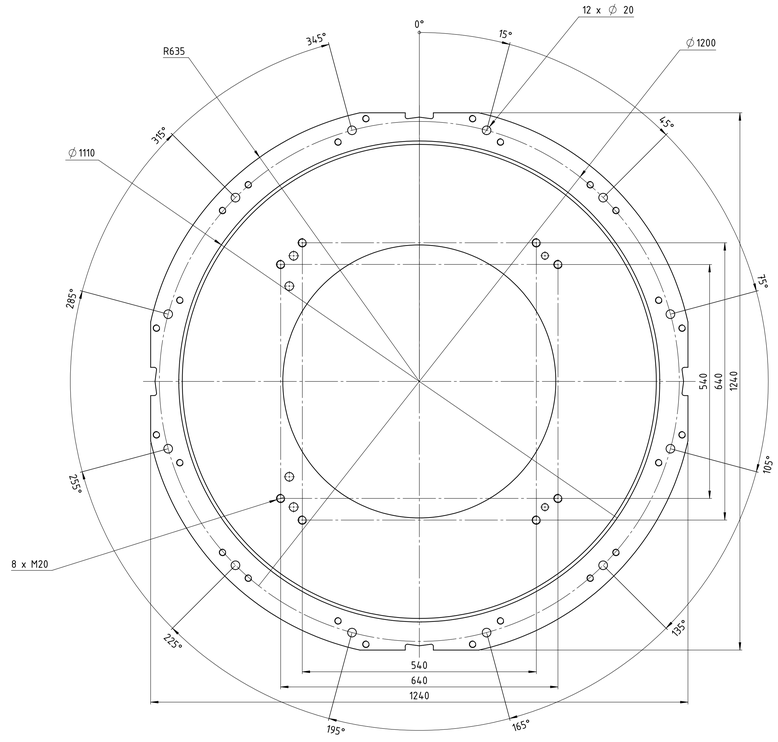

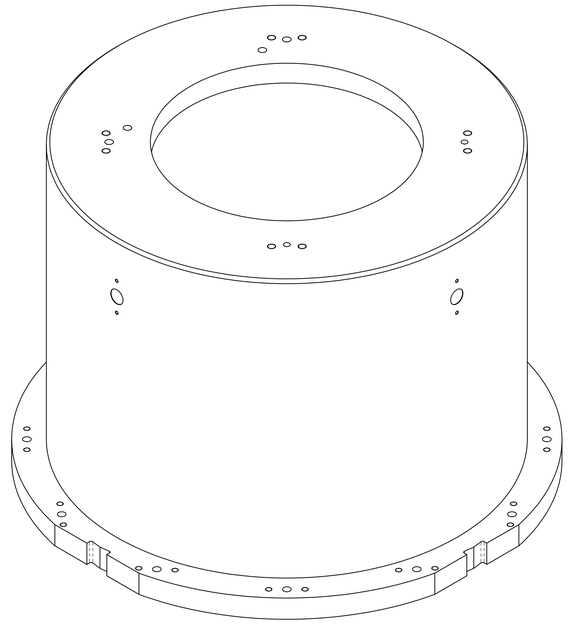

where nothing else is indicated tolerances: DIN ISO 2768-mH welding: DIN EN ISO 13920-A edges: DIN EN ISO 13715 -0.3 -0.5 -0.3	status: Released SAP EMEA no:	SAP AM no: 227537	YASKAWA www.yaskawa.eu.com	dimension:	weight: 545,675 kg
				created: 2023-07-19	McNaab
				drawn: 2023-07-19	McNaab
				approved: 2023-07-19	RaSeid
	title / description: robot stand R-900			drawing-no.: 0000049957-100	revision: 01

sheet: A0
1.5 / 4/5

CONFIDENTIAL: The reproduction, distribution and utilization of this document as well as the communication of its contents to others without express authorization is prohibited. Offenders will be held liable for the payment of damages. All rights reserved in the event of the grant of a patent, utility model or design.